Osram VALVES

X65 TRIODE-HEXODE FREQUENCY CHANGER

DESCRIPTION

Type X65 is a triode-hexode valve designed primarily for use as a frequency changer in superheterodyne circuits. Its major advantage is its high input impedance. Due to the electrode design the positive grid current effect on short waves is negligible, and thus the actual stage gain is of a high order on the short waveband, resulting in a good signal-to-noise ratio, and can be made reasonably constant over a wide frequency band.

RATINGS

Heater Voltage ...	6·3	volts
Heater Current	0·3	amp
Anode Voltage ...	250	max. volts
Screen Grid Voltage	100	max. volts
Signal Grid Voltage	–3	min. volts
Oscillator Anode Voltage	100	max. volts
Total Cathode Current ...	11	mA
Conversion Conductance* at $Vg_1 = -3$	225	μA/V
$Vg_1 = -45$	0·2	μA/V
Input Impedance* at 28 Mc/s ...	22,400	ohms
56 Mc/s ...	6,800	ohms
Conversion Impedance*	2·5	megohms

* measured at Va = 250 ; $Vg_{2,4}$ = 100 ; Voa = 100.

Capacitances :

Oscillator Anode to all other electrodes	5·6	approx. pF
Signal Grid to all other electrodes ...	3·7	,, ,,
Hexode Anode to all other electrodes	7·8	,, ,,
Oscillator Grid to all other electrodes	9·6	,, ,,

DIMENSIONS

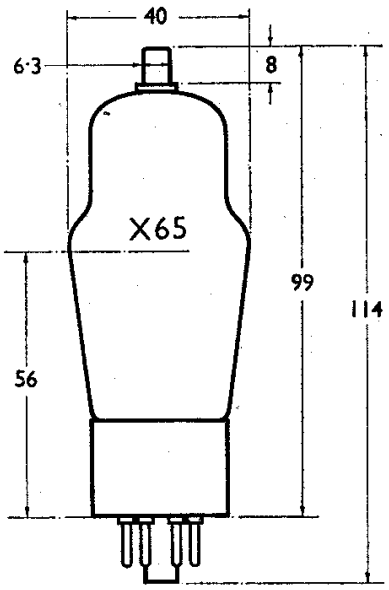

All dimensions are in mm. and are the maximum except where otherwise stated.

BASE

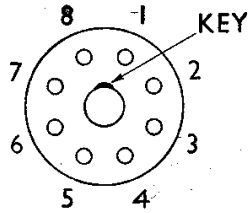

View looking on underside of base.

8 PIN OCTAL

Pin 1 : Not connected
2 : Heater
3 : Anode
4 : Screen Grids $g_{2,4}$
5 : Oscillator and Mixer Grid g_3
6 : Oscillator Anode
7 : Heater
8 : Cathode
Top Cap : Signal Grid g_1

Type X65 is not supplied with metallised bulb. Screening should be used when necessary.

OPERATING CONDITIONS

Anode Voltage...	250	volts
Screen Grid Voltage (Potentiometer supply)	100	volts
Signal Grid D.C. Voltage ...	–3	volts
Oscillator Anode D.C. Voltage (Series supply) ...	100	volts
Oscillator Anode Resistor (from 250v. supply) ...	30,000	ohms
Optimum R.F. Oscillator Grid Voltage	10	peak volts
Oscillator Grid Resistor ...	100,000	ohms
Total Cathode Current ...	11	mA